ECAV™

DESIGN • WIRE
ENGINEER • BUILD

AV DRAWING SOFTWARE

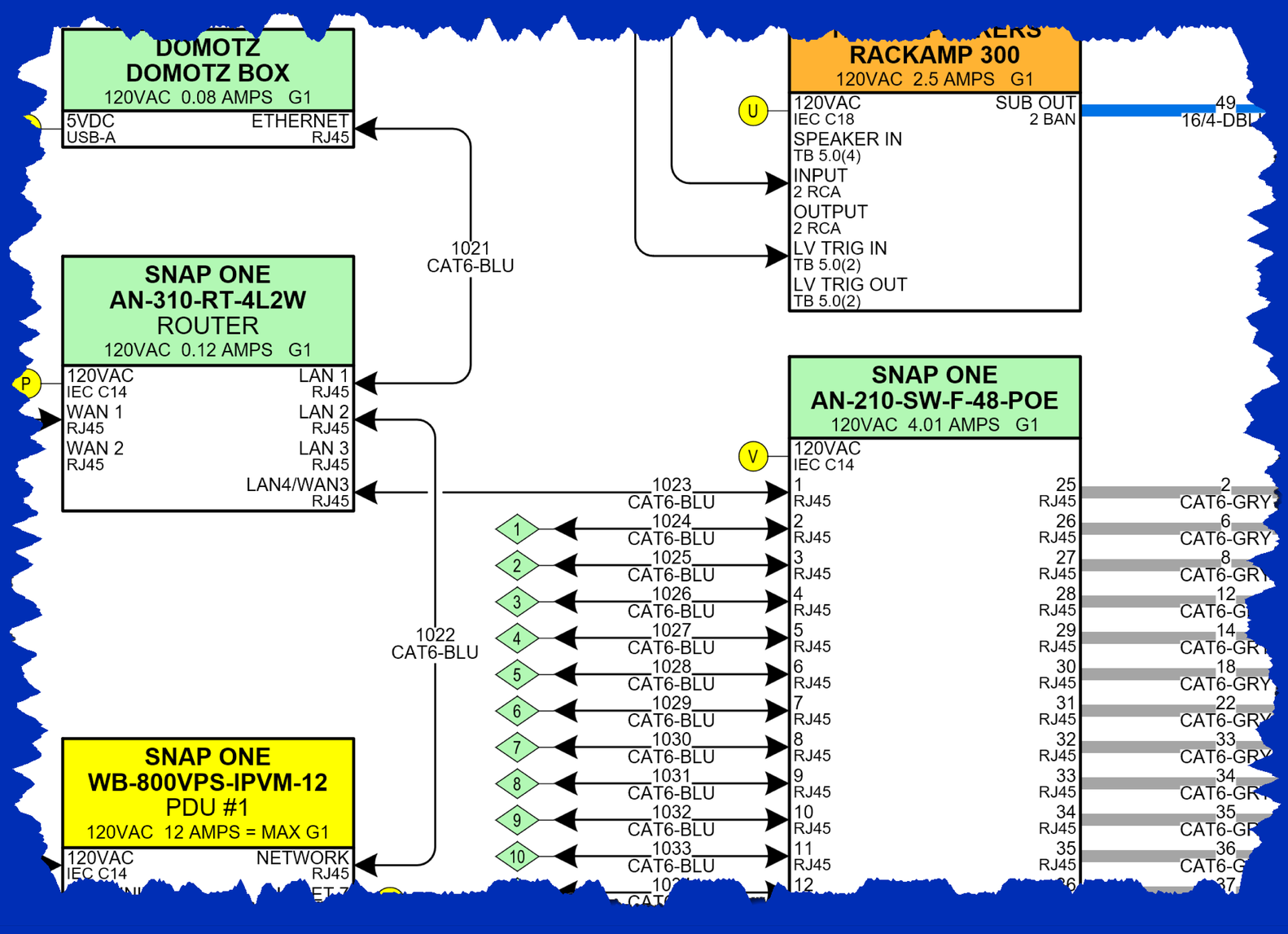

FOR STREAMLINED DESIGN & ENGINEERING WORKFLOWS

SymbolLogic

125 Pond Road, Burnham, ME 04922
207-692-0805
www.SymbolLogic.com

ECAV™ By SymbolLogic

SYSTEM DESIGN & ENGINEERING

AV FLOOR PLAN (DESIGN)

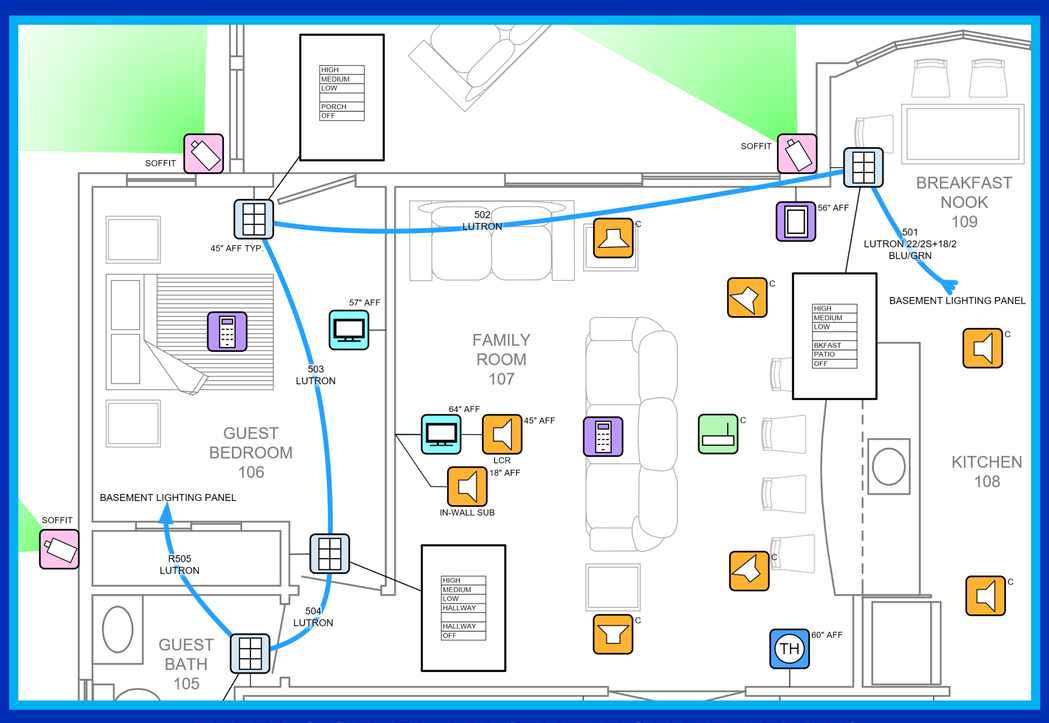

AV FLOOR PLAN (THE FOUNDATION)

Legend		
Symbol	Count	Description
	12	Loudspeaker
	2	TSTAT/Humidistat
	2	Video Display
	2	Touch Panel
	1	Wireless Access Point
	16	Lighting User Interface
	2	Remote Control
	6	Control Contact Switch
	7	Surveillance Camera

AUTOMATIC PAGE LEGEND

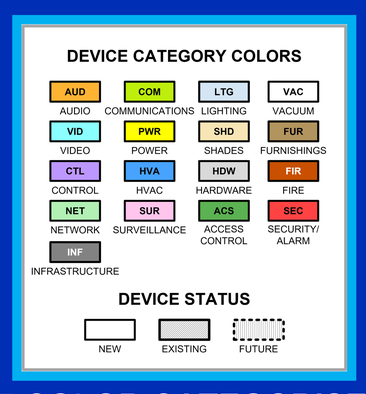

17 COLOR CATEGORISED SYMBOL LIBRARIES

- Show Prewires, Conduits & Wire Lengths
- Globally Resize Symbols
- Show Device Coverage Angles and Areas
- Easily Create Customized Symbols
- Show Keypad Engravings

FULL SYSTEM BLOCK DIAGRAM (WIRE)

- Single-Page Design Tool
- Visual Estimator Page Included
- Symbols Automatically Track Location & Connections
- Simple Product Database Integration
- Auto Conversion of Symbol Types
- Instantly Generate Reports

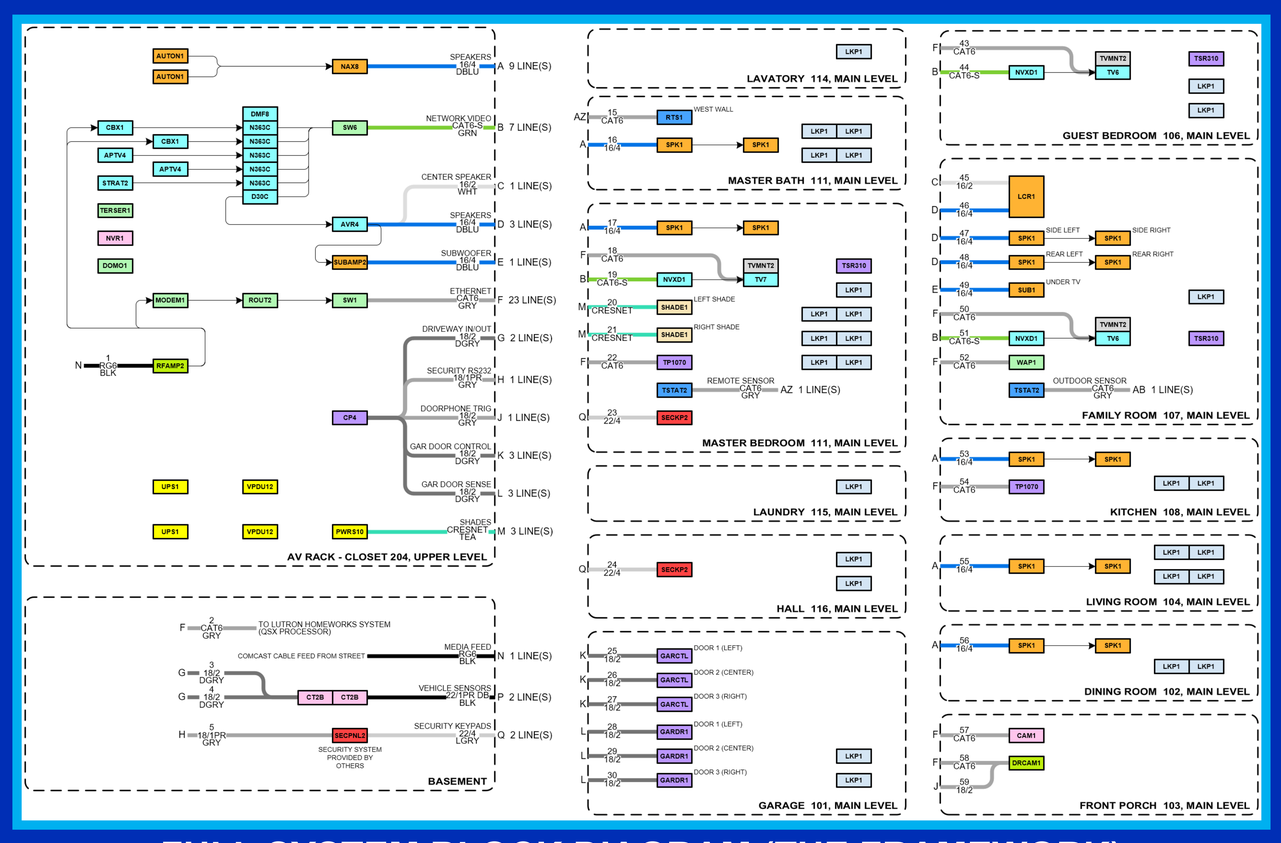

FULL SYSTEM BLOCK DIAGRAM (THE FRAMEWORK)

Pre-Wire Schedule by Room

To Room Name	To Room No	To Floor	To Area	To Location	From Floor	From Room Name	From Area	Wire Number	Wire Type	FUNCTION	Wire Length (ft)
			Basement	Lighting Processor	Upper Level	Closet	AV Rack	2	CAT6-GRY	Ethernet	
			Basement	TO LOC	Upper Level	Closet	AV Rack	3	18/2-DGRY	Driveway IN/Out	
			Basement	TO LOC	Upper Level	Closet	AV Rack	4	18/2-DGRY	Driveway IN/Out	
			Basement	TO LOC	Upper Level	Closet	AV Rack	5	18/1PR-GRY	Security RS232	
Count											
AV Room (Upgrade)	207	2nd Floor		TO LOC	Upper Level	Closet	AV Rack	205	CAT6-S-GRN	Network Video	
AV Room (Upgrade)	207	2nd Floor		Projector	Upper Level	Closet	AV Rack	206	CAT6-GRY	Ethernet	
Count		2									
Cinema Rack (Upgrade)	206	2nd Floor		TO LOC	Upper Level	Closet	AV Rack	200	CAT6-GRY	Ethernet	
Cinema Rack (Upgrade)	206	2nd Floor		TO LOC	Upper Level	Closet	AV Rack	201	CAT6-S-GRN	Network Video	
Cinema Rack (Upgrade)	206	2nd Floor		TO LOC	Upper Level	Closet	AV Rack	202	CRESNET-TEA	Shades	
Count		3									
Closet		204	Upper Level	AV Rack	TO LOC					Media Feed	
Count		1									
Dining Room	102	Main Level			TO LOC	Upper Level	Closet	AV Rack	56	16/4-DBLU	Speakers
Count		1									
Family Room	107	Main Level			LCR Speaker	Upper Level	Closet	AV Rack	45	16/2-WHT	Center Speaker
Family Room	107	Main Level			LCR Speaker	Upper Level	Closet	AV Rack	46	16/4-DBLU	Speakers
Family Room	107	Main Level			Side Left	Upper Level	Closet	AV Rack	47	16/4-DBLU	Speakers
Family Room	107	Main Level			Rear Left	Upper Level	Closet	AV Rack	48	16/4-DBLU	Speakers
Family Room	107	Main Level			Under TV	Upper Level	Closet	AV Rack	49	16/4-DBLU	Subwoofer
Family Room	107	Main Level			TO LOC	Upper Level	Closet	AV Rack	50	CAT6-GRY	Ethernet
Family Room	107	Main Level			TO LOC	Upper Level	Closet	AV Rack	51	CAT6-S-GRN	Network Video
Family Room	107	Main Level			TO LOC	Upper Level	Closet	AV Rack	52	CAT6-GRY	Ethernet
Count		8									
Front Porch	103	Main Level			TO LOC	Upper Level	Closet	AV Rack	57	CAT6-GRY	Ethernet
Front Porch	103	Main Level			TO LOC	Upper Level	Closet	AV Rack	58	CAT6-GRY	Ethernet
Front Porch	103	Main Level			TO LOC	Upper Level	Closet	AV Rack	59	18/2-GRY	Doorphone Trig
Count		3									
Garage	101	Main Level			Door 2 (Center)	Upper Level	Closet	AV Rack	26	18/2-DGRY	Gar Door Control
Garage	101	Main Level			Door 3 (Right)	Upper Level	Closet	AV Rack	27	18/2-DGRY	Gar Door Control
Garage	101	Main Level			Door 1 (Left)	Upper Level	Closet	AV Rack	28	18/2-DGRY	Gar Door Sense
Garage	101	Main Level			Door 2 (Center)	Upper Level	Closet	AV Rack	29	18/2-DGRY	Gar Door Sense
Garage	101	Main Level			Door 3 (Right)	Upper Level	Closet	AV Rack	30	18/2-DGRY	Gar Door Sense
Garage	101	Main Level		Door 1	Door 1 (Left)	Upper Level	Closet	AV Rack	25	18/2-DGRY	Gar Door Control
Count		6									
Guest Bedroom	106	Main Level			TO LOC	Upper Level	Closet	AV Rack	43	CAT6-GRY	Ethernet
Guest Bedroom	106	Main Level			TO LOC	Upper Level	Closet	AV Rack	44	CAT6-S-GRN	Network Video
Count		2									
Hall	116	Main Level			TO LOC			Basement	24	22/4-LGRY	Security Keypads
Count		1									
Kitchen	108	Main Level			TO LOC	Upper Level	Closet	AV Rack	53	16/4-DBLU	Speakers
Kitchen	108	Main Level			TO LOC	Upper Level	Closet	AV Rack	54	CAT6-GRY	Ethernet
Count		2									
Living Room	104	Main Level			TO LOC	Upper Level	Closet	AV Rack	55	16/4-DBLU	Speakers
Count		1									
Master Bath	111	Main Level			West Wall	Main Level	Master Bedroom		15	CAT6-GRY	Remote Sensor
Master Bath	111	Main Level			TO LOC	Upper Level	Closet	AV Rack	16	16/4-DBLU	Speakers
Count		2									

PRE-WIRE SCHEDULES

Headend Space Estimate

To Area	To Floor	To Room Name	To Room No	Manufacturer	Model No	Rack Units (RU)	Height (in)	Width (in)	Depth (in)	Weight (lb)
AV Rack	Upper Level	Closet	204	Apple	Apple TV 4K		1.4	3.9	3.9	1
AV Rack	Upper Level	Closet	204	Apple	Apple TV 4K		1.4	3.9	3.9	1
AV Rack	Upper Level	Closet	204	Autonomic	MMS-1e	1	1.3	6	3.9	1
AV Rack	Upper Level	Closet	204	Autonomic	MMS-1e	1	1.3	6	3.9	1
AV Rack	Upper Level	Closet	204	Comcast (OFE)	XG1V4		1.2	10.6	6.3	
AV Rack	Upper Level	Closet	204	Comcast (OFE)	XG1V4		1.2	10.6	6.3	
AV Rack	Upper Level	Closet	204	Crestron	CP4	1	[illegible]	[illegible]	[illegible]	[illegible]
AV Rack	Upper Level	Closet	204	Crestron	CSA-PWS10S-HUB-ENET		[illegible]	[illegible]	[illegible]	[illegible]
AV Rack	Upper Level	Closet	204	Crestron	DMF-C1-8	2	[illegible]	[illegible]	[illegible]	[illegible]
AV Rack	Upper Level	Closet	204	Crestron	DM-NAX-8ZSA	2	[illegible]	[illegible]	[illegible]	[illegible]
AV Rack	Upper Level	Closet	204	Crestron	DM-NVX-363C		[illegible]	[illegible]	[illegible]	[illegible]
AV Rack	Upper Level	Closet	204	Crestron	DM-NVX-363C		[illegible]	[illegible]	[illegible]	[illegible]
AV Rack	Upper Level	Closet	204	Crestron	DM-NVX-363C		[illegible]	[illegible]	[illegible]	[illegible]
AV Rack	Upper Level	Closet	204	Crestron	DM-NVX-363C		[illegible]	[illegible]	[illegible]	[illegible]
AV Rack	Upper Level	Closet	204	Crestron	DM-NVX-D30C		[illegible]	[illegible]	[illegible]	[illegible]
AV Rack	Upper Level	Closet	204	Domotz	Domotz Box		[illegible]	[illegible]	[illegible]	[illegible]
AV Rack	Upper Level	Closet	204	Kaleidescape	Compact Terra	1	[illegible]	[illegible]	[illegible]	[illegible]
AV Rack	Upper Level	Closet	204	Kaleidescape	Strato C	1	[illegible]	[illegible]	[illegible]	[illegible]
AV Rack	Upper Level	Closet	204	Luma Surveillance	LUM-510-NVR-8CH	2	[illegible]	[illegible]	[illegible]	[illegible]
AV Rack	Upper Level	Closet	204	Marantz	SR5015	5	[illegible]	[illegible]	[illegible]	[illegible]
AV Rack	Upper Level	Closet	204	Netgear	CM2050V		[illegible]	[illegible]	[illegible]	[illegible]
AV Rack	Upper Level	Closet	204	Snap One	AN-210-SW-F-48-POE	1	[illegible]	[illegible]	[illegible]	[illegible]
AV Rack	Upper Level	Closet	204	Snap One	AN-310-RT-4L2W	1	[illegible]	[illegible]	[illegible]	[illegible]
AV Rack	Upper Level	Closet	204	Snap One	AN-310-SW-F-16-POE	1	[illegible]	[illegible]	[illegible]	[illegible]
AV Rack	Upper Level	Closet	204	Snap One	WB-800VPS-IPUNI-12		[illegible]	[illegible]	[illegible]	[illegible]
AV Rack	Upper Level	Closet	204	Snap One	WB-800VPS-IPUNI-12		[illegible]	[illegible]	[illegible]	[illegible]
AV Rack	Upper Level	Closet	204	Snap One	WB-DVRC-UPS-1500-1	2	[illegible]	[illegible]	[illegible]	[illegible]
AV Rack	Upper Level	Closet	204	Snap One	WB-DVRC-UPS-1500-1	2	[illegible]	[illegible]	[illegible]	[illegible]
AV Rack	Upper Level	Closet	204	Snap One	WP-OUT-VID1x8PWR-PC		[illegible]	[illegible]	[illegible]	[illegible]
AV Rack	Upper Level	Closet	204	Triad Speakers	RACKAMP 300	1	[illegible]	[illegible]	[illegible]	[illegible]
Total						24	[illegible]			
Grand Total						24	63			

HEADEND SPACE ESTIMATE

BoM by Manufacturer

Manufacturer	Model No	Subcategory	Reference ID	Quantity
Apple	Apple TV 4K	Player	APTV4	2
Autonomic	MMS-1e	Player	AUTON1	2
Cartell	CT-2B	Processor	CT2B	2
Cartell	CT-6-200	Sensor	CT6	2
Comcast (OFE)	XG1V4	Cable Box	D30C	2
Crestron	CHV-RSS	Sensor	DBLK1	1
Crestron	CHV-RTS	Sensor	DMF8	1
Crestron	CNTBLOCK	Block	DOMO1	1
Crestron	CP4	Processor	DRCAM1	1
Crestron	CSA-PWS10S-HUB-ENET	Power Supply	GARCTL	3
Crestron	CSM-QMTDC-275-4-CN	Shade	GARDR1	3
Crestron	DMF-C1-8	Cardframe	LCR1	1
Crestron	DM-NAX-8ZSA	Switcher/Amp	LKP1	16
Crestron	DM-NVX-363C	Card	MODEM1	1
Crestron	DM-NVX-D30	Decoder	NAX8	1
Crestron	DM-NVX-D30C	Card	NVR1	1
Crestron	HZ-THSTAT-W	Thermostat	NVXD1	4
Crestron	TSR-310	Remote	PWRS10	1
Crestron	TSW-1070	Touch Panel	RFAMP2	1
Domotz	Domotz Box	Monitor	ROUT2	1
Door Bird	D1101V	Intercom	RSS1	1

BOM

Block Diagram Device Legend

Reference ID	Manufacturer	Model No	Subcategory	Quantity
APTV4	Apple	Apple TV 4K	Player	2
AUTON1	Autonomic	MMS-1e	Player	2
AVR4	Marantz	SR5015	AVR	1
CAM1	Luma Surveillance	LUM-410-DOM-IP-BL	Camera	7
CAM2	Luma Surveillance	LUM-510-PTZ-IP-WH	Camera	1
CBX1	Comcast (OFE)	XG1V4	Cable Box	2
CP4	Crestron	CP4	Processor	1
CT2B	Cartell	CT-2B	Processor	2
CT6	Cartell	CT-6-200	Sensor	2
D30C	Crestron	DM-NVX-D30C	Card	1
DBLK1	Crestron	CNTBLOCK	Block	1
DMF8	Crestron	DMF-C1-8	Cardframe	1
DOMO1	Domotz	Domotz Box	Monitor	1
DRCAM1	Door Bird	D1101V	Intercom	1
GARCTL	N/A	N/A	Switch	3
GARDR1	Seco-Larm	SM-226L-3Q	Sensor	3
LCR1	Triad Speakers	OnWall Mini LCR 3.0	Speaker	1
LKP1	Lutron	HQWA-W78N	Keypad	16
MODEM1	Netgear	CM2050V	Modem	1
N363C	Crestron	DM-NVX-363C	Card	8
NAX8	Crestron	DM-NAX-8ZSA	Switcher/Amp	1
NVR1	Luma Surveillance	LUM-510-NVR-8CH	NVR	1
NVXD1	Crestron	DM-NVX-D30	Decoder	4
PROJ1	Sony	VPL-VW715ES	Projector	1
PWRS10	Crestron	CSA-PWS10S-HUB-ENET	Power Supply	1
RFAMP2	Snap One	WP-OUT-VID1x8PWR-PC	Splitter	1
ROUT2	Snap One	AN-310-RT-4L2W	Router	1
RSS1	Crestron	CHV-RSS	Sensor	1

LEGEND

PoE (Watts) Totals

	Wire Group	From Model No	To Model No	PoE (Watts)
	B	AN-310-SW-F-48-POE	R350	12.6
	B	AN-310-SW-F-48-POE	R350	12.6
	B	AN-310-SW-F-48-POE	R350	12.6
	B	AN-310-SW-F-48-POE	R350	12.6
	B	AN-310-SW-F-48-POE	R350	12.6
	B	AN-310-SW-F-48-POE	R350	12.6
	B	AN-310-SW-F-48-POE	R350	12.6
Total				88.2
	F	AN-310-SW-F-48-POE	TSW-1070	15
	F	AN-310-SW-F-48-POE	TSW-1070	15
	F	AN-310-SW-F-48-POE	TSW-1070	15
	F	AN-310-SW-F-48-POE	TSW-1070	15
	F	AN-310-SW-F-48-POE	TSW-1070	15
Total				75
Grand Total				163.2

POE TOTALS

ENGINEERING DRAWINGS SIMPLIFIED

*Fully Editable Symbols & Database **Included***

SCHEMATICS (ENGINEER)

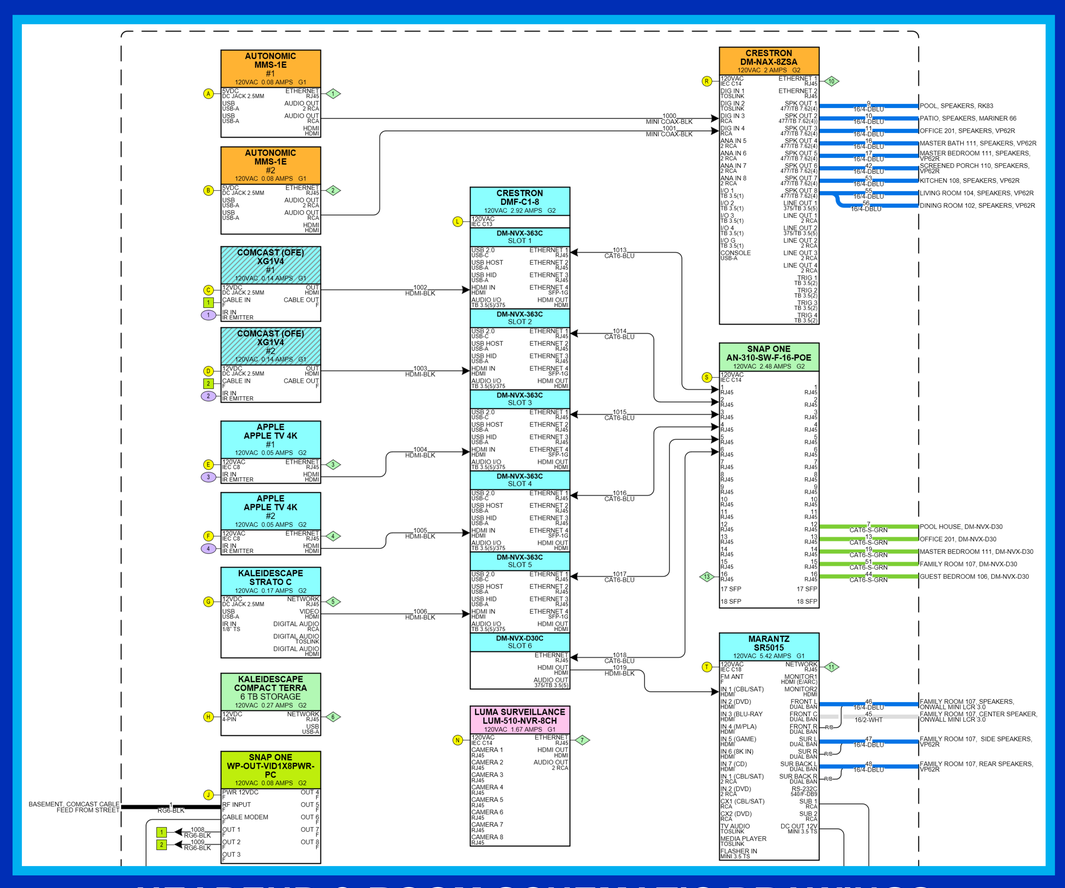

HEADEND & ROOM SCHEMATIC DRAWINGS (THE DETAILS)

- Create Standard and Card Frame/ Plug-In Card Symbols
- Easily Edit or Clone Symbol I/O Ports
- Use Color-Coded Wire References to Prevent Drawing Clutter
- Power Group Assignments Help Optimize AC Load Balance

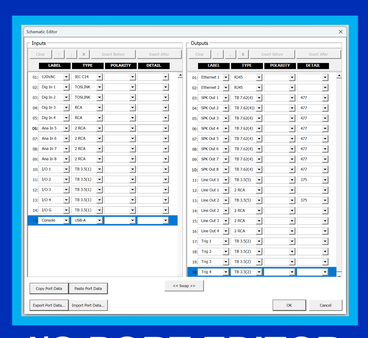

I/O PORT EDITOR

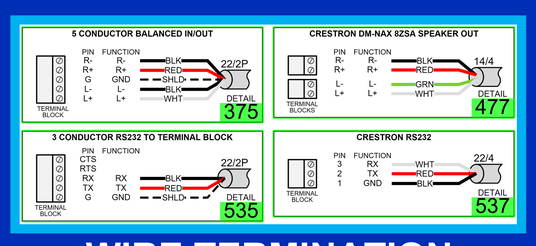

WIRE TERMINATION SYMBOLS

RACK ELEVATIONS (BUILD)

- Create any US or Metric Scaled Rack Designs
- Built-in Rack Ruler and Depth Bars
- Flexible Device Mounting Options
- Instantly Generate Reports with Calculations

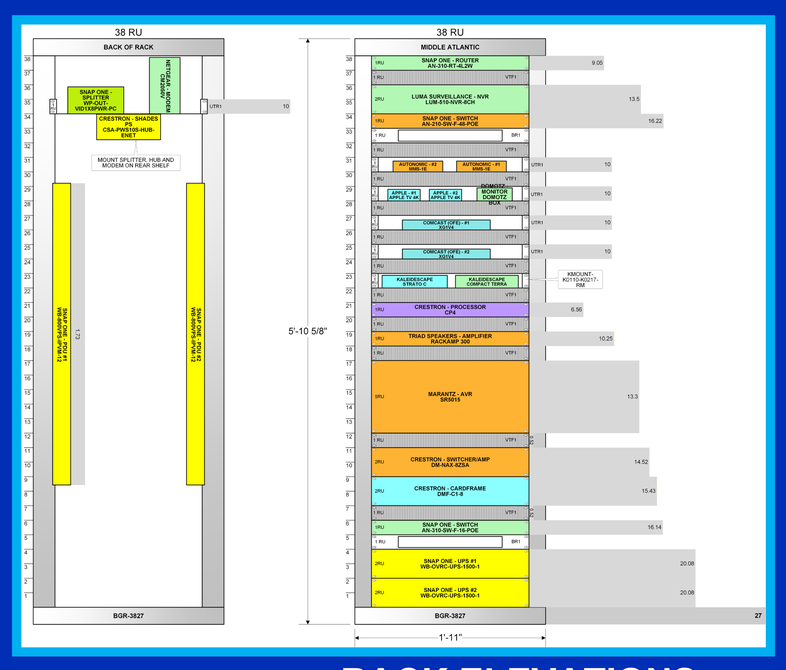

RACK ELEVATIONS (HEADEND CONSTRUCTION)

ACCESSORIES			
MANUFACTURER	MODEL NO	DESCRIPTION	PCS/ PKG
	LBP-4A	Lace Bar 4 Inch Offset, L-Shape…	
	HP	10-32 Rackscrew Truss-Head - 100 …	

ACCESSORIES

Rack Dimensions				
Manufacturer	Model No	Rack Height (RU)	Overall Rack Height (in)	Width (in)	Depth (in)
			70.63	23	27

RACK DIMENSIONS

Rack(s) Bill of Materials				
Manufacturer	Model No	Description	Pieces/Package	Quantity
Kaleidescape	KMOUNT-K0110-K0217-RM	Kaleidescape - Terra (compact)/Strato C Rack-Mount Hardware - Black		1
Middle Atlantic	BGR-3827	BGR SERIES 19" GANGABLE ENCLOSURES		1
Middle Atlantic	BR1	1 RU Brush Grommet Panel		2
		32 Rackscrew Truss-Head - 100 Piece		1
		r 4 Inch Offset, L-Shaped - 10 Pieces		1
		UTR1 - Half / third rack shelf		6
		Panel, Perforated with 25% Open Area		11

RACK BOM

AC Current and Ventilation Totals			
	Current [Typical] (Amps)	Heat [Typical] (Btu/h)	Ventilation [Typical] (CFM)
Total	23.97	6453.31	597.53

AC CURRENT & VENTILATION TOTALS

WALL ELEVATIONS (BUILD)

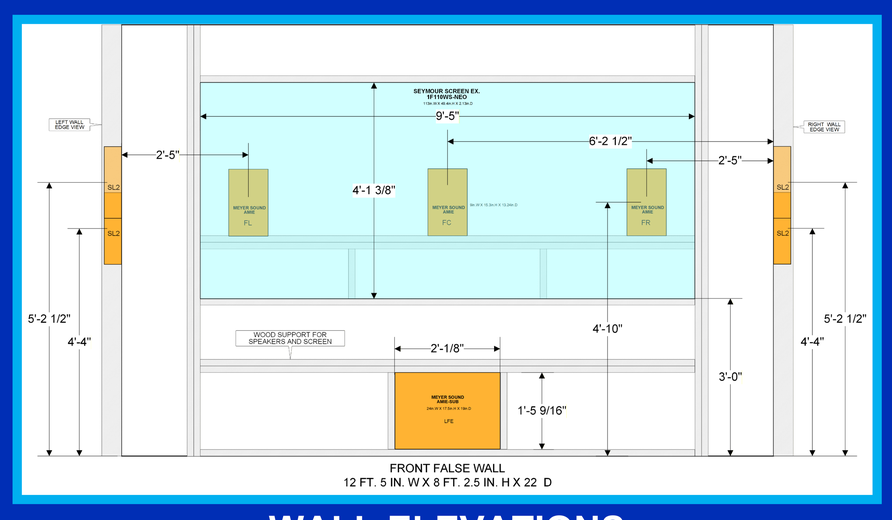

WALL ELEVATIONS (ROOM CONSTRUCTION)

- Create any US or Metric Scaled Wall or Room Designs
- Includes Walls, Back Boxes, Panels, Enclosures, Covers, Devices, and Support Symbols

ECAV's Powerful Drawing Tools Make it Easy & Productive

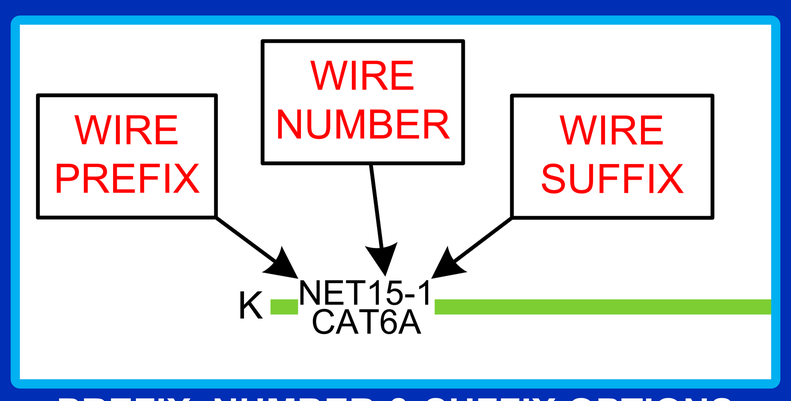

PREFIX, NUMBER & SUFFIX OPTIONS FOR WIRE LABELING

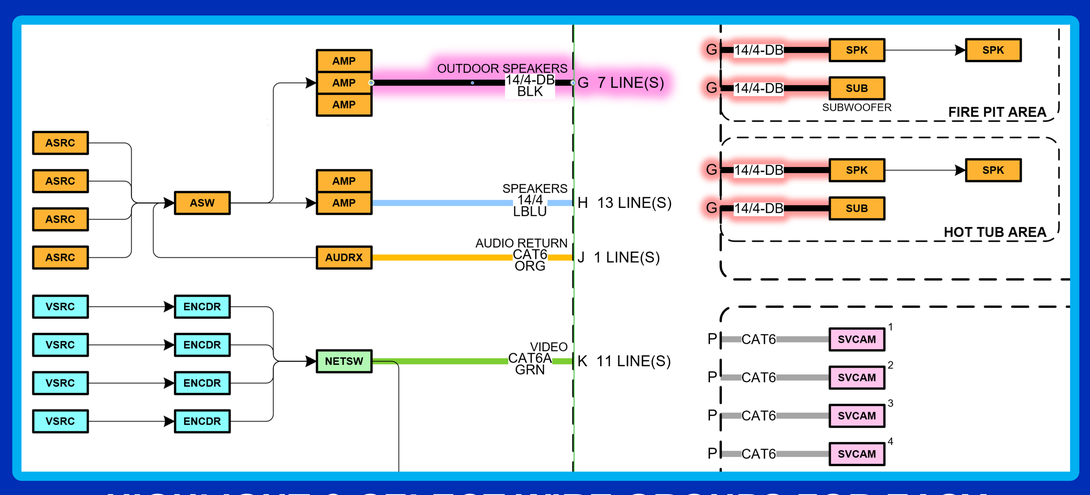

HIGHLIGHT & SELECT WIRE GROUPS FOR EASY IDENTIFICATION & TRANSFORMATION

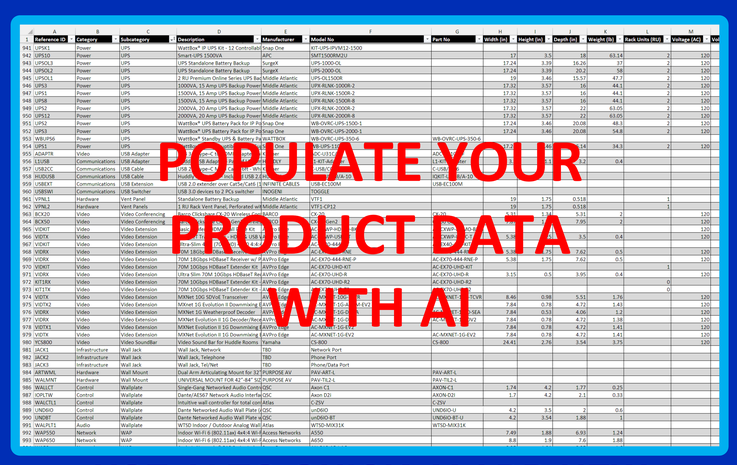

USE AI TO QUICKLY ADD NEW PRODUCT DATA

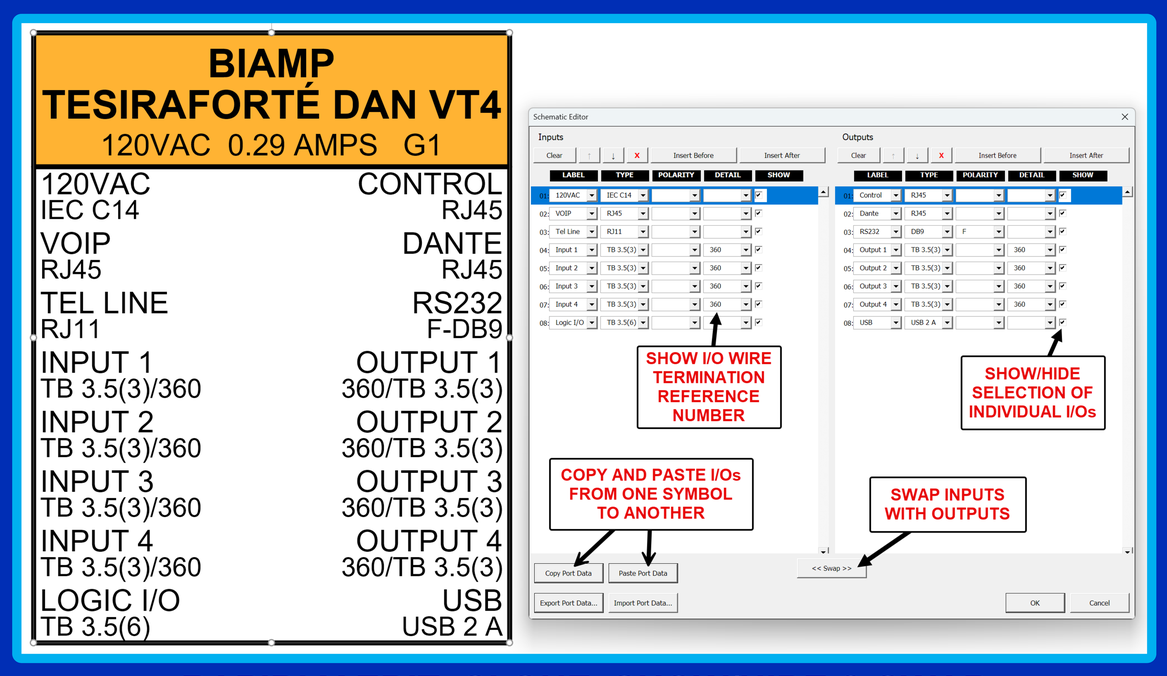

RAPIDLY EDIT, CLONE, SHOW/HIDE & SWAP SCHEMATIC I/O PORTS

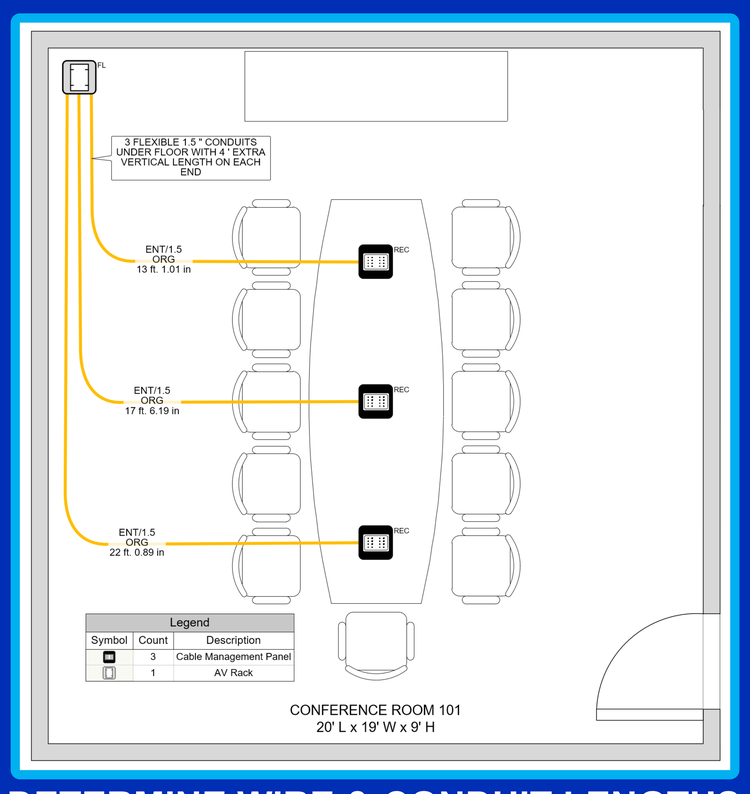

DETERMINE WIRE & CONDUIT LENGTHS WITH THE WIRE LENGTH SYMBOL

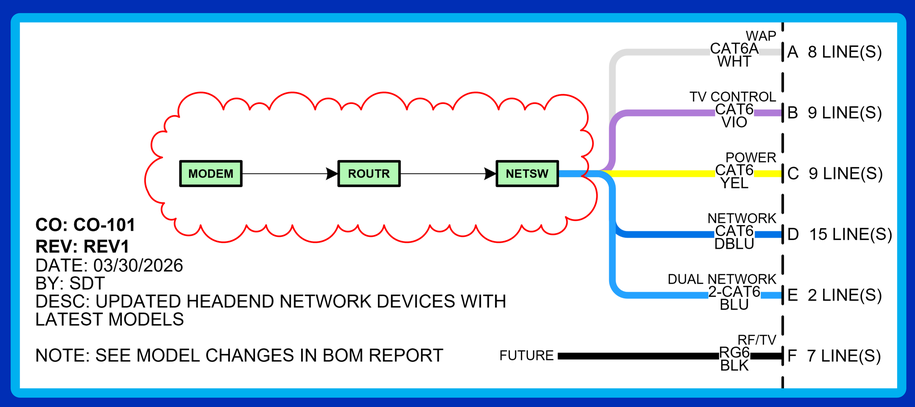

EASILY MANAGE CHANGE ORDERS AND DRAWING REVISIONS

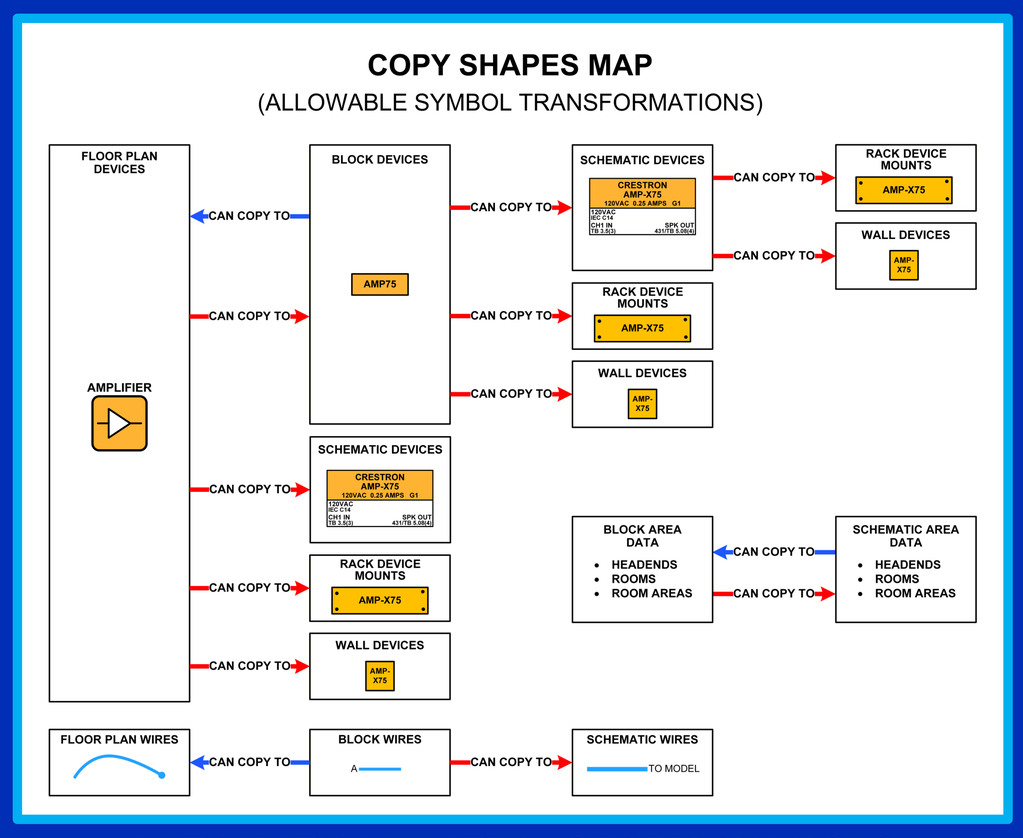

AUTOMATICALLY TRANSFORM SYMBOLS FROM ONE DRAWING PAGE TO ANOTHER

SymbolLogic

Enjoy the journey

www.SymbolLogic.com